More Precision

MICRO-EPSILON

thermoIMAGER TIM 40

Compact OEM thermal imaging camera

The new TIM 40 is a robust and compact thermal imaging camera with motorized focus which enables the user to focus easily on targets via remote control. Its compact design and favorable price make the industrial camera ideally suitable for OEM purposes.

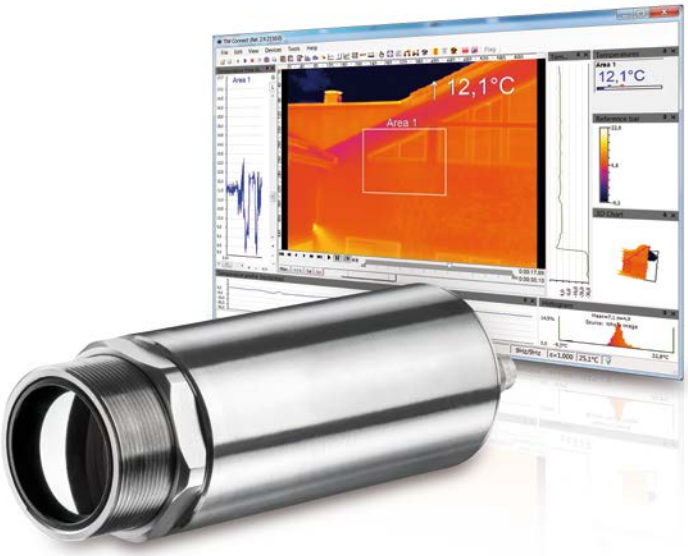

Advantages

- Industrial camera with 382 x 288 pixels for precise temperature measurements from -20 °C to 900 °C
- Robust and compact imager with motorized focus
- Excellent optical resolution with distance-to-spot-size-ratio up to 390:1
- Frame rate of 80 Hz for monitoring of fast thermal processes
- Comprehensive ready-to-use package including versatile software with line scan feature

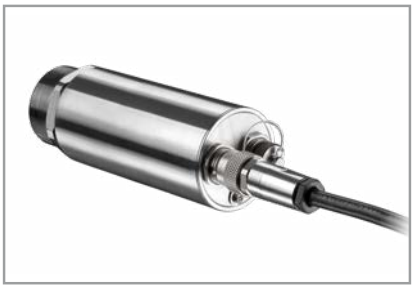

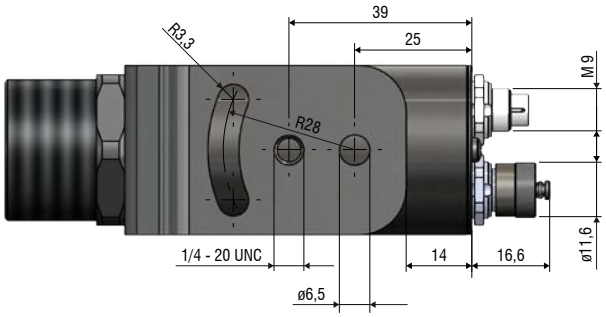

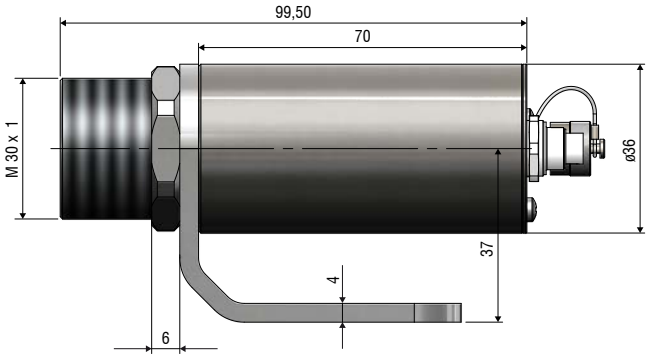

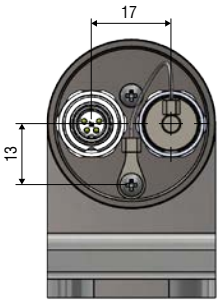

thermoIMAGER TIM 40

Model	TIM 40
Optical resolution	382 x 288 pixels
Temperature ranges	-20 °C to 100 °C, 0 °C to 250 °C, (20)150 °C to 900 °C [1]
Spectral range	7.5 to 13 µm
Frame rate	switchable 80 Hz or 27 Hz
System accuracy	±2 °C or ±2 %, whichever is greater
Lenses	18° x 14° FOV / f = 20 or 29° x 22° FOV / f = 12.7 or 53° x 38° FOV / f = 7.7 or 80° x 54° FOV / f = 5.7
Focus	Manual motorized focus
Optical resolution (D:S)	390:1 (18° lens)
Thermal sensitivity (NETD)	80 mK
Detector	FPA, uncooled (17 µm x 17 µm)
Outputs/digital	USB 2.0 / optional interface USB to GigE (PoE)
Standard process interface (PIF)	0-10 V input, digital input (max. 24 V), 0-10 V output
Industry process interface (PIF)	2x 0-10 V inputs, digit. Input (max. 24 V), 3 x 0-10 V outputs, 3 x relays (0-30 V / 400 mA), fail-safe relay
Cable length (USB)	1 m (standard), 3 m, 5 m, 10 m, 20 m
Power supply	USB powered
Tripod mount	¼-20 UNC
Protection class	IP67
Ambient temperature	0 °C to 50 °C
Storage temperature	-40 °C to 70 °C
Relative humidity	20 to 80 %, non-condensing
Vibration [2]	IEC 60068-2-6 (sinus-shaped) / IEC 60068-2-64 (broadband noise)
Shock [2]	IEC 60068-2-27 (25 g and 50 g)
Housing (size) [2]	ø 36 mm x 100 mm (M30x1 thread)
Weight	200 g

[1] For the range (20)150 up to 900 °C, the accuracy specification applies from 150 °C
[2] For more information see operating instructions

Scope of supply (standard)

- TIM 40
- USB cable 1 m
- PIF cable incl. terminal block (1 m)
- Mounting angle with tripod thread, mounting nut
- TIMConnect Software